WOODFORD

Anti-Siphon

Freezeless Wall Hydrants

Model 65/B65/RB65

The Model 65, B65 & RB65 are automatic draining, freezeless wall hydrants with hose connection anti-siphon vacuum breakers. Hydrants drain as handle is shut off, *even if hose is attached.* All models are intended for irrigation purposes and blend in with modern architecture for installation on restaurants, schools, office buildings, churches, apartments, motels, stores, shopping centers and industrial buildings.

SPECIFICATIONS:

MODEL 65/B65/RB65 -
- ASSE Standard 1019-B approved
- IAPMO® listed
- Meets Government Specification WW-P-541b

VACUUM BREAKER - ANTI SIPHON -
- NIDEL® Model 34HA with ¾ inch male hose thread
- ASSE Standard 1011 approved
- IAPMO® listed

FEATURES:

- Permanent type brass valve body with hemispherical seating surface.
- One piece valve plunger accurately controls both flow and drainage with a minimum number of turns and without need for adjustments.
- Drains under nozzle away from hands of operator and with a lip to divert water away from building.
- Copper casing tubes.
- No Lead Solder on all solder joints.
- Hardened stainless steel stem resists damage.
- Loose key operates hydrant.
- 3/8" solid brass operating rod.
- Four inlet options (See below)
- Wall clamp furnished on all 60 series except close coupled.
- Max Pressure: 125 p.s.i.
- Max Temperature: 120° F

Inlet Options

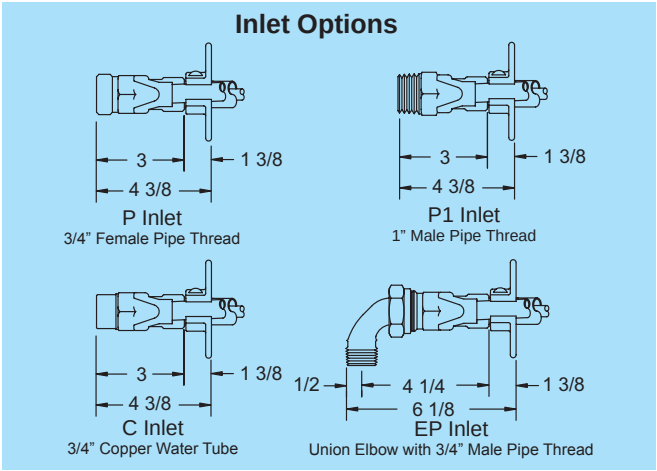

Specify as follows:

Wall hydrant shall be Woodford Model 65 (exposed type), B65 or RB65 (concealed box type), automatic draining with anti-siphon vaccum breaker. ASSE Standard 1019-B approved. ¾" inlet and outlet (specify type of inlet). Hardened stainless steel operating stem and one-piece valve plunger to control both flow and drain functions. Exterior finish to be Chrome Plated (options: Polished Brass or Rough Brass). Loose tee key to be furnished with each hydrant. Wall thickness to be _____ inches.

For Installation / Troubleshooting Instructions go to www.woodfordmfg.com or call 1-800-621-6032

MODEL 65

Exterior Finish:
Standard - Chrome (CH)
Optional - Brass (BR) Polished Brass (PB)
Fits one standard modular brick course.

MODEL B65

Exterior Finish: Box & Door
Standard - Chrome (CH)
Optional - Brass (BR) Polished Brass (PB)
Anodized Aluminum Box (AL)
Fits two std. modular brick course or one course of facing tile.

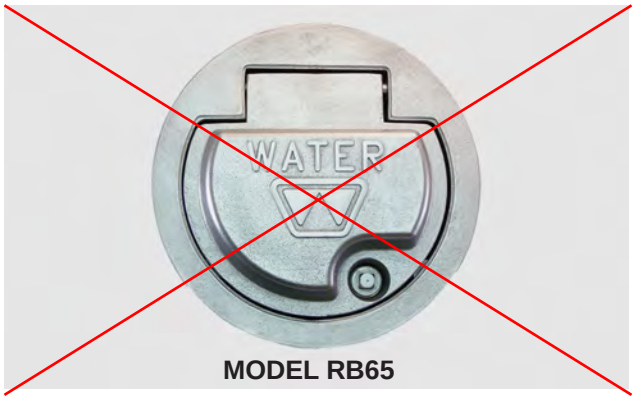

MODEL RB65

Exterior Finish: Box & Door - Chrome (CH) Only
Designed especially for tilt-up wall construction.
Install through 6" diameter hole.
Two 3/8"-16 tapped holes for all-thread anchors in back of box. Lift and latch door stays open when hydrant is in use.

When ordering, specify model, inlet and wall thickness

©2012 WOODFORD Mfg. 0977

HB-1 EXTERIOR BOXED HOSEBIB

WOODFORD®

Woodford Excellence Since 1929
Proudly Made In The U.S.A.

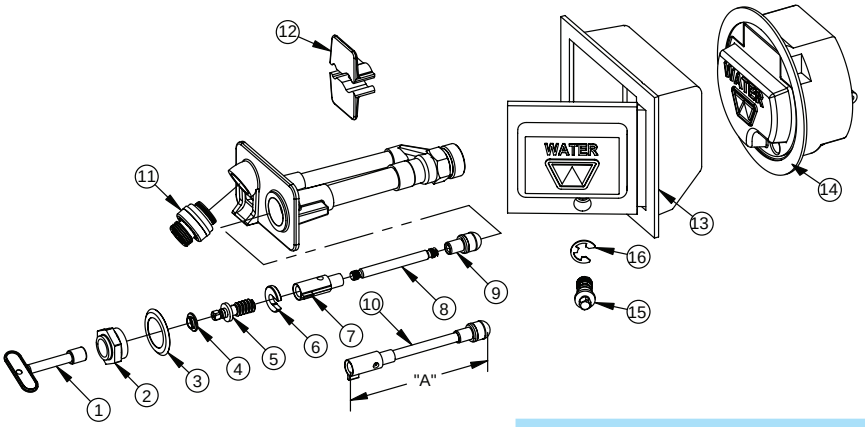

MODEL 65/B65/RB65 PARTS LIST

ITEM	PART #	DESCRIPTION
1	50009	Tee Key
	50010	Long Tee Key (Box Models)
2	50264	Head Nut – chrome
	50265	Head Nut – brass
3	50583	I.D. RING
4	50252	Stem Washer
5	55062	Stem Screw
6	50251	"C" washer
7	51014	Yoke Nut
8	Operating Rod (Sold With Item 10 Only)	
9	50250	Plunger
10	554XX	Operating Rod Assembly (Includes Items 7,8,9)
	(Select required assembled length from table below)	
11	34HA-CH	34HA Vacuum Breaker – chrome
	34HA-BR	34HA Vacuum Breaker – brass
12	55063	Wall Clamp Assembly
13	67BX	Box/Door Assembly – Chrome
	65BXF	Box/Flat Door Assembly – Chrome
	67BX-BR	Box/Door Assembly - Brass
	65BXF-BR	Box/Flat Door Assembly - Brass
	67BX-PB	Box/Door Assembly – Polished Brass
	65BXF-PB	Box/Flat Door Assembly – Polished Brass
	67BX-AL	Box/Door Assembly – Aluminum
14	RB67BX	Round Box/Door Assembly - Chrome
	RK-65	Chrome Repair Kit (Includes Items 1-7 & 9)
15	51117	Door Lock Screw - Chrome
	51116	Door Lock Screw - Brass
16	51120	E-Ring

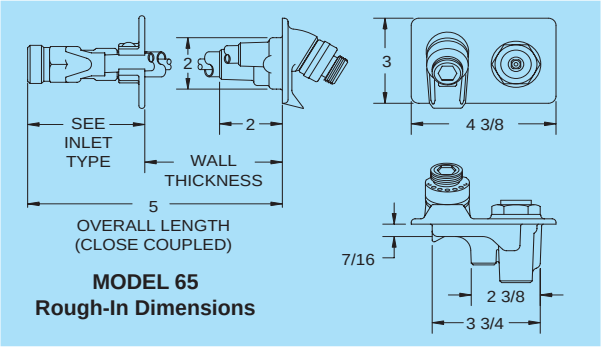

MODEL 65
Rough-In Dimensions

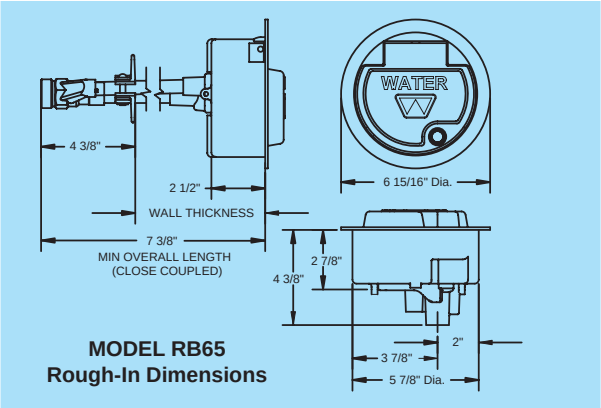

MODEL RB65
Rough-In Dimensions

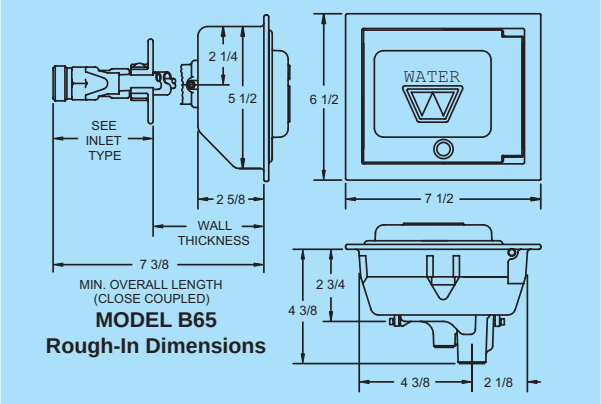

MODEL B65
Rough-In Dimensions

Operating Rod Assy. "A"			
Wall Thickness		Length	Part No.
65	B65/RB65		
CC	CC	3 ½"	55401
N/A	4	4 ½"	55402
4	6	6 ½"	55404
6	8	8 ½"	55406
8	10	10 ½"	55408
10	12	12 ½"	55410
12	14	14 ½"	55412
14	16	16 ½"	55414
16	18	18 ½"	55416
18	20	20 ½"	55418
20	22	22 ½"	55420
22	24	24 ½"	55422
24	N/A	26 ½"	55424

Manufactured under one or more of the following patents:
U.S. Patents:
3,414,001
4,178,956
4,316,481
4,532,954
D216,790
D216,791
D277,365
D277,366
Canada Patents:
852,529
865,995
1,146,438

Wall Thickness (Inch)	CC	4	6	8	10	12	14	16	18	20	22	24
Overall Length - Hydrant	5	8	10	12	14	16	18	20	22	24	26	28
Overall Lenth - Box Models	7 3/8	8 3/8	10 3/8	12 3/8	14 3/8	16 3/8	18 3/8	20 3/8	22 3/8	24 3/8	26 3/8	28 3/8
Shipping Wt. (Lbs)**	3.8	4.4	4.8	5.2	5.6	6	6.4	6.8	7.2	7.6	8	8.4

** Add 8.3 Lbs. for brass box models.
** Add 2.5 Lbs. for aluminum box models.

NOTE: Close Coupled Models are not recommended for use in freezing climates and cannot use wall clamp.

For more information contact...

WOODFORD MANUFACTURING COMPANY

2121 Waynoka Road, Colorado Springs, Colorado 80915 • **Phone:** (800) 621-6032 • **Fax:** (800) 765-4115
To view our complete product line visit: ***www.woodfordmfg.com*** *or email:* ***sales@woodfordmfg.com***
A Division Of WCM Industries, Inc.